Rewarding Learning

Centre Number

Candidate Number

General Certificate of Secondary Education
2019

Technology and Design

Unit 2

Option A:

Electronic and Microelectronic Control Systems

[GTY21]

GTY21

FRIDAY 31 MAY, MORNING

TIME

1 hour 30 minutes.

INSTRUCTIONS TO CANDIDATES

Write your Centre Number and Candidate Number in the spaces provided at the top of this page.
You must answer the questions in the spaces provided.
Do not write outside the boxed area on each page or on blank pages.
Questions which require drawing or sketching should be completed using an H.B. pencil.
All other questions must be completed using black ink only.
Do not write in pencil or with a gel pen.
Answer **both** questions.

INFORMATION FOR CANDIDATES

The total mark for this paper is 100.
Quality of written communication will be assessed in Question **1(d)**.
Figures in brackets printed down the right-hand side of pages indicate the marks awarded to each question or part question.
The Formula sheet is on page 3.

11887.05**R**

BLANK PAGE

DO NOT WRITE ON THIS PAGE

Formulae for GCSE Technology and Design

You should use, where appropriate, the formulae given below when answering questions which include calculations.

1 Potential Difference = current × resistance ($V = I \times R$)

2 For potential divider $V_{out} = \frac{R_2}{(R_1 + R_2)} \times V_{in}$

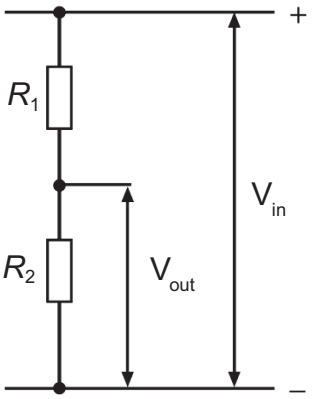

3 Series Resistors $Rt = R1 + R2 + ... + Rn$

4 Parallel Resistors $\frac{1}{R_t} = \frac{1}{R_1} + \frac{1}{R_2}$ or $R_t = \frac{R_1 \times R_2}{R_1 + R_2}$

5 Time Constant $T = R \times C$

6 Period $T = \frac{1}{f}$

7 Frequency (H_z) $f = \frac{1.44}{(R_1 + 2R_2)C}$ for the output of an astable circuit using a 555 timer

8 Time $T = 1.1 \times C \times R$ for the output of a monostable circuit using a 555 timer

[Turn over

Answer **all** questions

1 **(a)** **(i)** Three electronic symbols, labelled **X**, **Y** and **Z** are shown in **Fig. 1**.

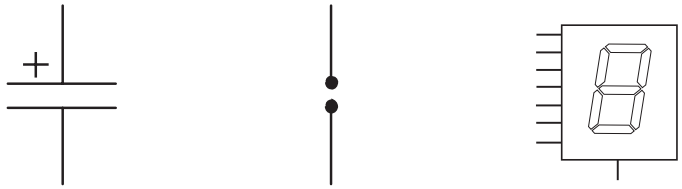

X **Y** **Z**

Fig. 1

Name the electronic component represented by each symbol and state if it is an input, process or output component.

X _____

_____ [2]

Y _____

_____ [2]

Z _____

_____ [2]

(ii) Outline **two** reasons for using a PCB in the construction of electronic circuits.

1 _____

_____

2 _____

_____ [2]

(b) The electronic symbol labelled **X** in **Fig. 1** is used in the circuit shown in **Fig. 2**.

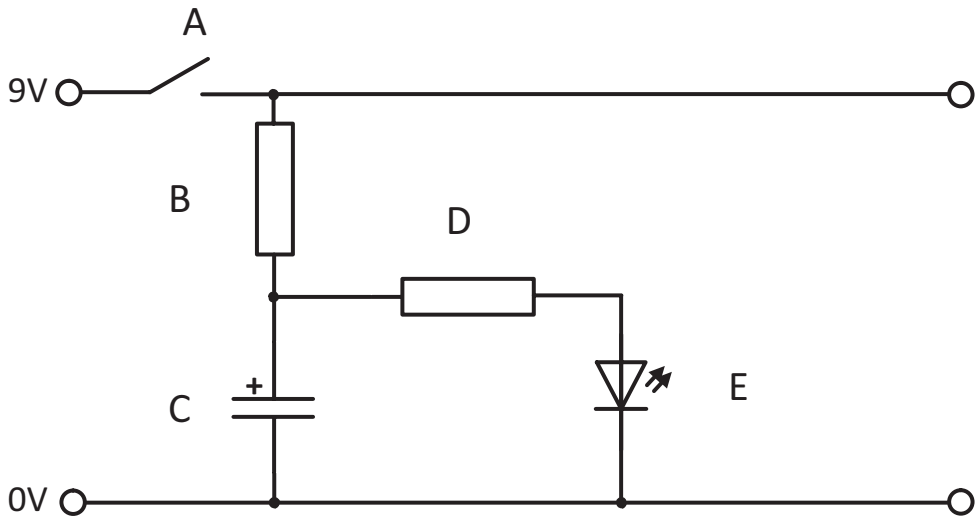

Fig. 2

(i) The switch labelled **A** in **Fig. 2** is an SPST switch. What do the letters **SPST** stand for?

_____ [1]

(ii) Name the electronic component represented by the symbol labelled **E** in **Fig. 2**.

_____ [1]

(iii) Explain what happens at component **C** when switch **A** is closed and the influence this will have on the operation of the circuit.

_____

_____

_____ [3]

[Turn over

(iv) Explain what happens when the switch at **A** is opened after the circuit has been operating for a while.

_____

_____ [2]

(v) Explain the purpose of component **D** in this circuit.

_____

_____ [2]

(vi) If component **E** is rated at 2 V 20 mA calculate the resistance needed to protect component **E**.

Answer _____ [4]

Part of the circuit in **Fig. 2** has been redrawn below and is labelled **Fig. 3**.
Component **C** has been replaced by the component labelled **F**.

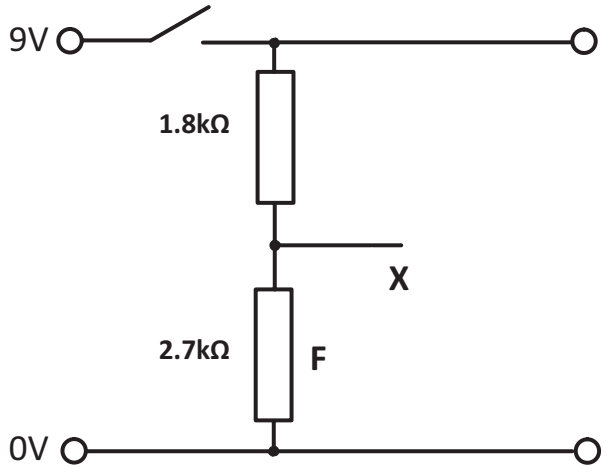

Fig. 3

(vii) Use the space below to calculate the expected voltage output at point **X**

Answer _____ [5]

[Turn over

(c) Two output waveforms from a 555 IC, labelled **X** and **Y**, are shown in **Fig. 4**. One is the output from an astable circuit and the other is from a monostable circuit.

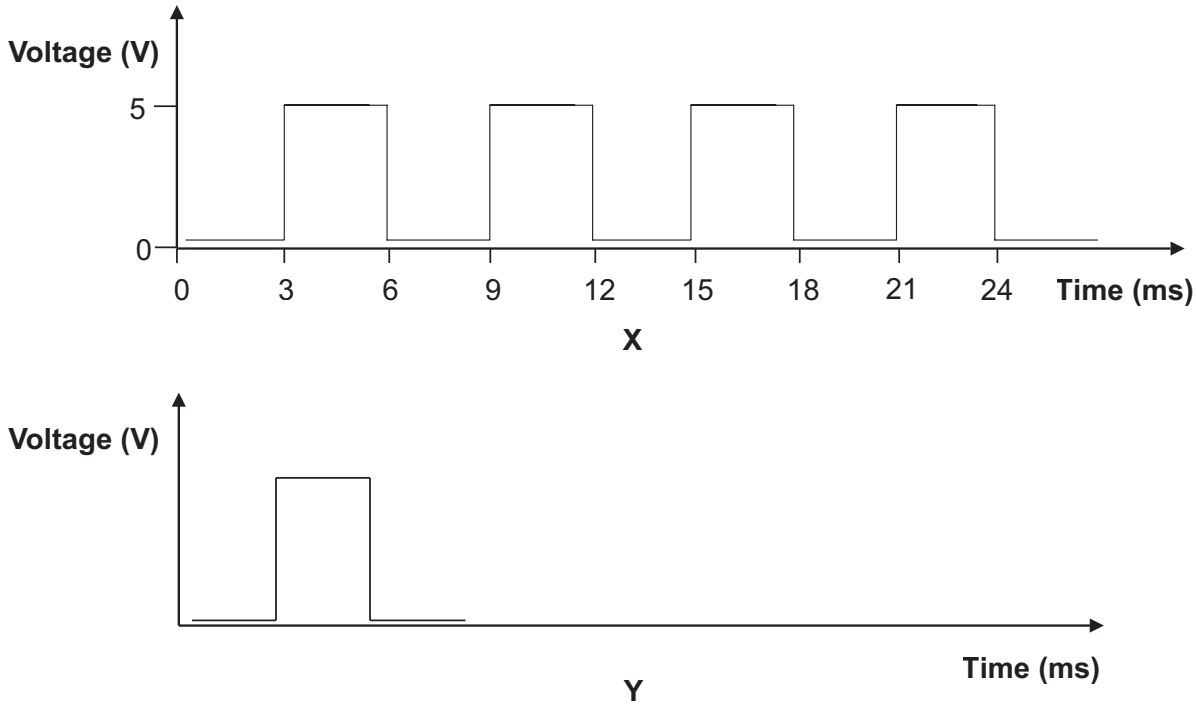

Fig. 4

(i) Identify the astable output waveform and the monostable output waveform in **Fig. 4** and provide a written explanation of an astable output and a monostable output.

Astable _____ [1]

Explanation _____

_____

_____ [2]

Monostable _____ [1]

Explanation _____

_____

_____ [2]

(ii) Describe **four** pieces of information that can be obtained from the waveform shown at **X** in **Fig. 4**.

_____

_____

_____

_____ [4]

(iii) Calculate the frequency of the output for the waveform shown at **X** in **Fig. 4**.

Answer _____ [4]

(d) Resistors are used extensively in electronics. Discuss and describe the need for resistors and the use of the four colour bands. Explain what is meant by 'Nearest preferred Value' and why this is necessary.

Your answer should focus on **five** points.

Quality of written communication will be assessed in this question.

[10]

2 There are many examples of where robots are used in society and in industry.

© PhonlamaiPhoto / Getty Images

Fig. 5

(a) **Fig. 5** shows a series of industrial robotic arms. Outline **three** reasons for the use of robotics in industry.

1 _____

_____ [1]

2 _____

_____ [1]

3 _____

_____ [1]

[Turn over

© Baloncici / Getty Images

Fig. 6

(b) **Fig. 6** shows a domestic robotic lawnmower. Compare the use of a robotic lawnmower to a conventional manually operated lawnmower. Your answer should focus on **three** points.

_____

_____

_____

_____

_____

_____ [3]

(c) Microcontrollers (PICs) are used in schools for many projects in Technology and Design.

Discuss the use of PICs in projects. Your discussion should focus on **three** points.

_____

_____

_____

_____

_____

_____ [3]

(d) **Fig. 7** shows a PIC circuit with a number of components missing. Complete the circuit to enable a motor to operate from a separate circuit which uses a 12 volt multi cell battery.

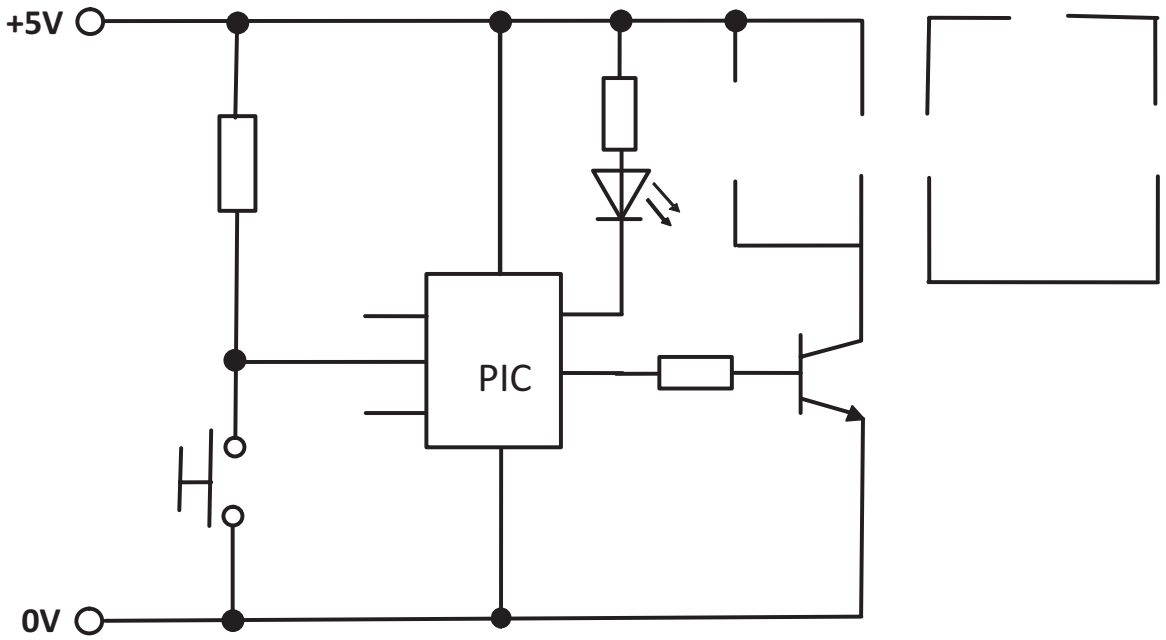

Fig. 7

[10]

[Turn over

(e) A proposed model for a hoist system is shown in **Fig. 8**. The hoist is to lift a product from the first floor to the second floor. The hoist system incorporates a cradle, motor, two pulley wheels and a pneumatic ram. A side view of the cradle with a product inside it is shown. The hoist is controlled by a PIC microcontroller contained within the control panel shown in **Fig. 9.**

When the Start Up switch is turned on, the green LED comes on and the motor will function to raise the cradle to the second floor, when the motor will stop.

When the ram operating switch is turned on, the blue LED comes on and the pneumatic ram will push the product out of the cradle onto a conveyor belt as shown. The pneumatic ram will return to its original position and the motor will then reverse to lower the cradle back to the first floor ready for the next product to be inserted into the cradle.

This process will repeat twenty times before stopping.

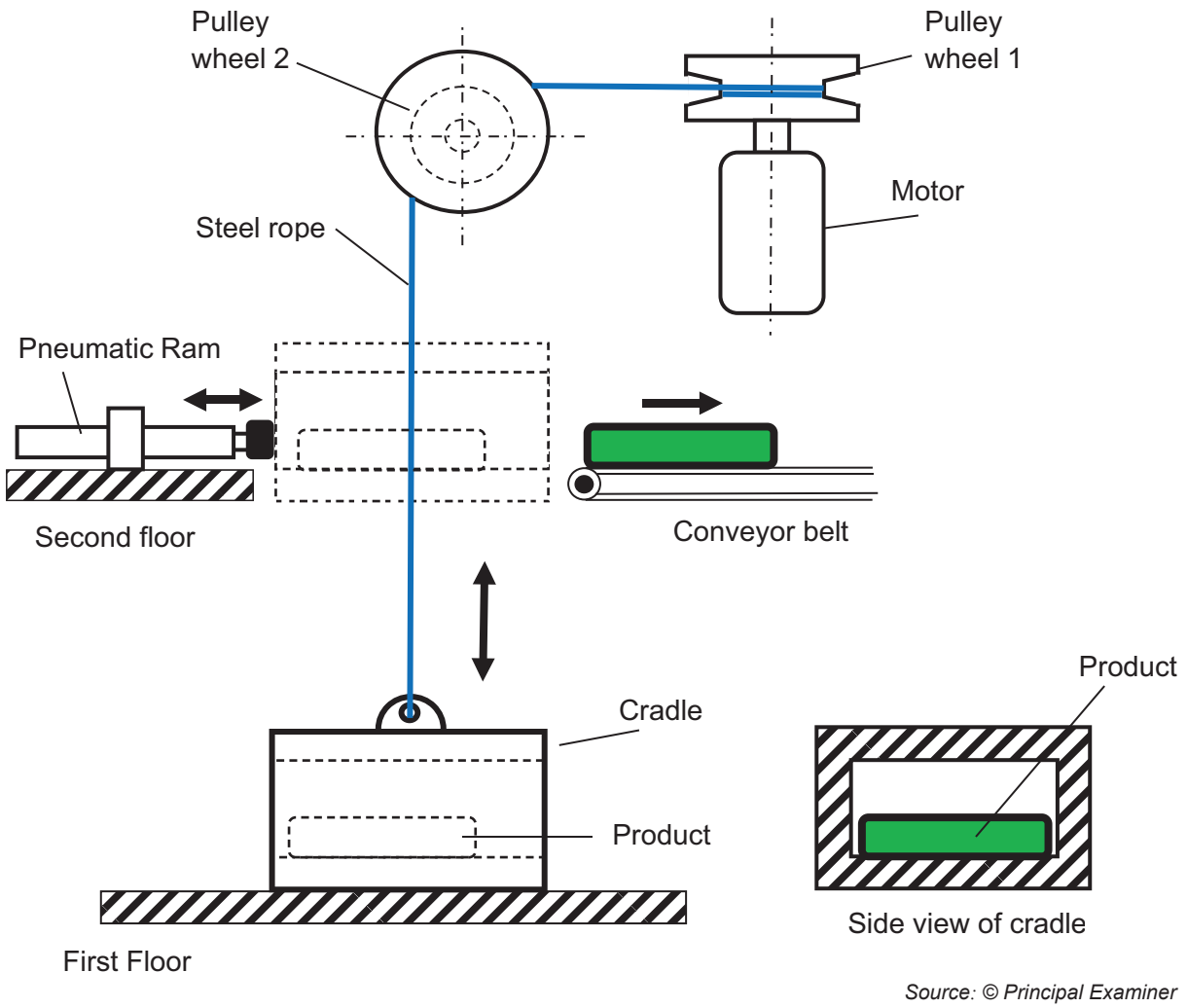

Source: © Principal Examiner

Fig. 8

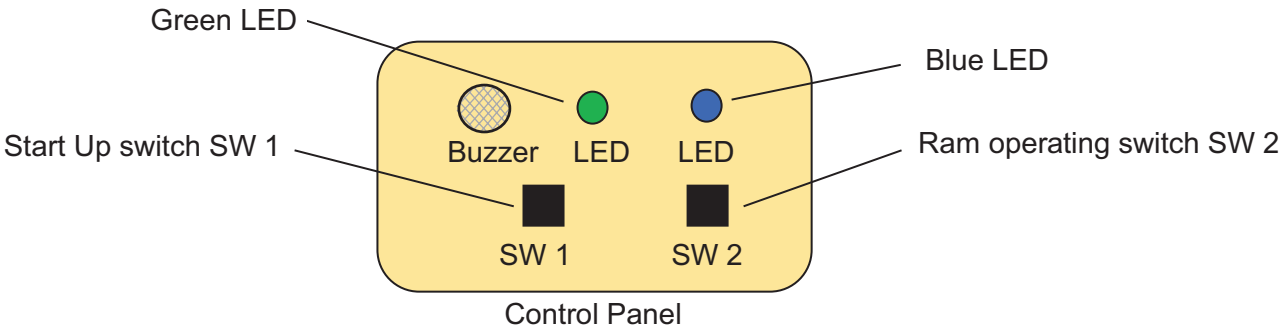

Source: © Principal Examiner

Fig. 9

[Turn over

A series of flowcharts is required to represent the operation of the hoist system.

(i) Complete the macro flowchart **START UP** in **Fig. 10** as follows:
When the Start Up switch is turned on the green LED comes on. Three seconds later the buzzer sounds for five seconds. Eleven seconds after the green light comes on, the motor rotates clockwise for ten seconds to enable the cradle to rise to the second floor before stopping.

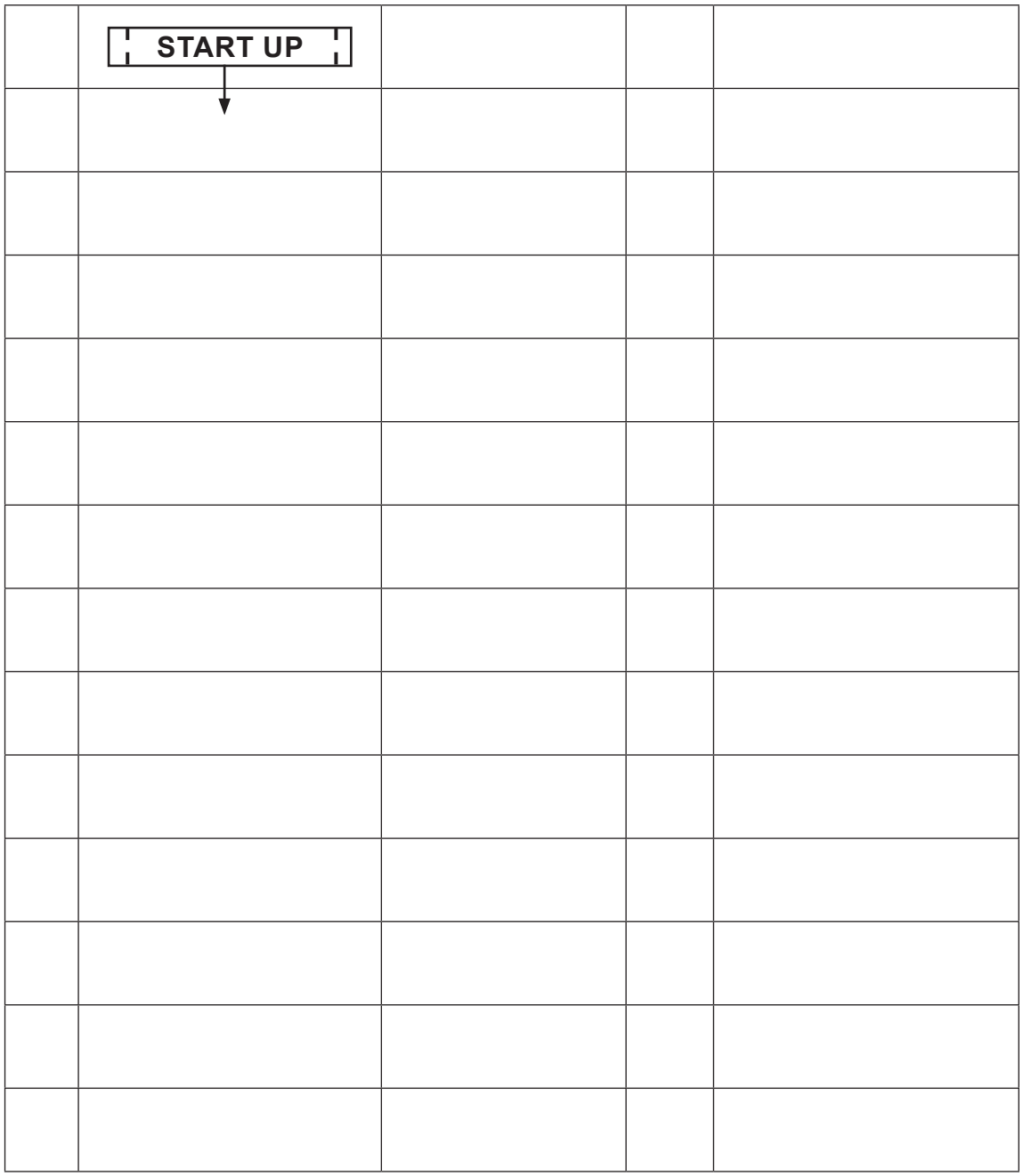

[12]

Fig. 10

(ii) Complete the macro flowchart **RAM** in **Fig. 11** to show the operation of the ram mechanism.

When the ram operating switch is turned on the blue LED comes on. The pneumatic ram will then go positive for four seconds pushing the product onto the conveyor belt. The pneumatic ram then returns back to its original position. This takes five seconds. The motor will then rotate anticlockwise returning the cradle to the first floor. This takes ten seconds. The Green LED and the Blue LED switch off.

	RAM			

[11]

Fig. 11

[Turn over

(iii) Complete the flowchart in **Fig. 12** to show the full operation of the hoist system.

The **START UP** macro will operate followed by the **RAM** macro. The hoist system is to operate twenty times before switching off.

	START			

[8]

Fig. 12

THIS IS THE END OF THE QUESTION PAPER

BLANK PAGE

DO NOT WRITE ON THIS PAGE

DO NOT WRITE ON THIS PAGE

For Examiner's use only	
Question Number	Marks
1	
2	
Total Marks	

Examiner Number

Permission to reproduce all copyright material has been applied for.
In some cases, efforts to contact copyright holders may have been unsuccessful and CCEA will be happy to rectify any omissions of acknowledgement in future if notified.